Ball Corporation
Beverage Packaging
Europe

PRODUCT DATA SHEET

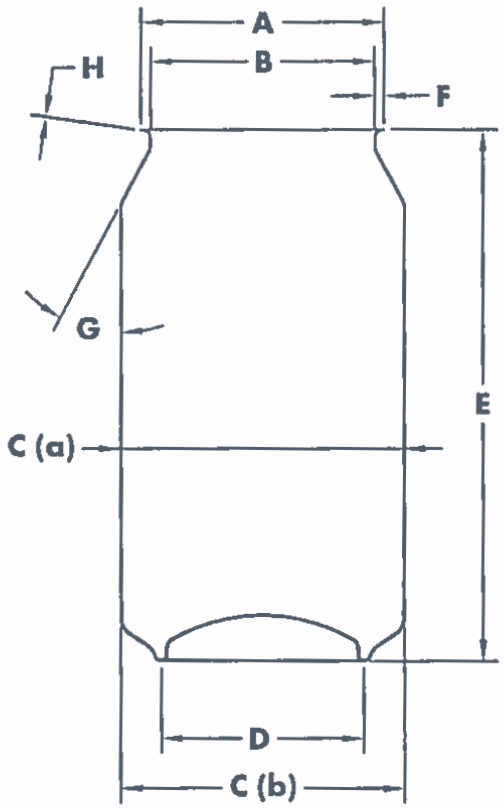

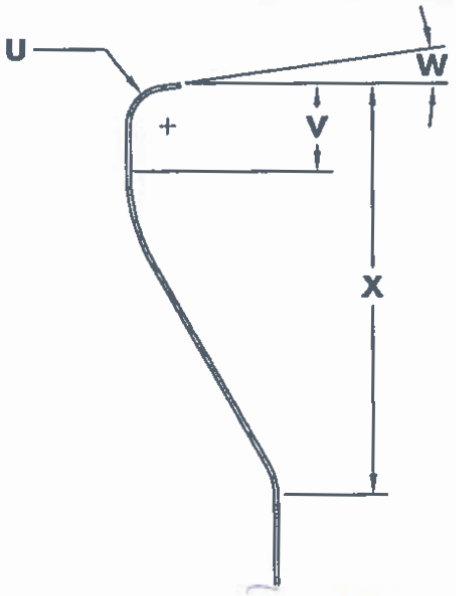

PRODUCT DESCRIPTION

52 X 66 (202 / 211) 440ML ALUMINIUM 202 NECK 202 BASE - 3LB-21f

ALL DIMENSIONS ARE IN MILLIMETRES AND ARE REFERENCE UNLESS STATED OTHERWISE.

A	Flange Diameter	57.5 MAX
B	Plug Diameter	52.40 +/- 0.30
C	Body Diameter (a)	66.2 MAX
C	Bottom Body Diameter (b)	66.5 MAX
D	Stand Diameter	47.34 REF
E	Open Can Height	149.90 +/- 0.30
F	Flange Width	2.13 +/- 0.25
G	Neck Angle	30°
U	Flange Radius	1.65 REF
V	Neck Seaming Clearance	3.0 MIN
W	Flange Angle	0 - 12°
X	Shoulder Height	17.2 REF
H	Flange Thickness *(To be used in Seam Calculations)*	0.175

- Brimful — 475ml
- Freeboard — 14.0mm NOMINAL
- Axial Load — 800N MIN
- Dome reversal — 620kPa MIN

Manufacturing Plants: **MKEY**

Approved By:
Sector Quality Manager Europe

PDS Number:	Revision	Date
C206	3	15/02/17

RESTRICTED, CONFIDENTIAL DOCUMENT. This document and the information thereon is the sole and exclusive property of Ball Beverage Packaging Europe Limited ("Ball"). Copyright © Ball 2016. All rights reserved.